美桦
MAYLAR

光伏连接器使用说明书

PV-Connector user manual

PV-15MC

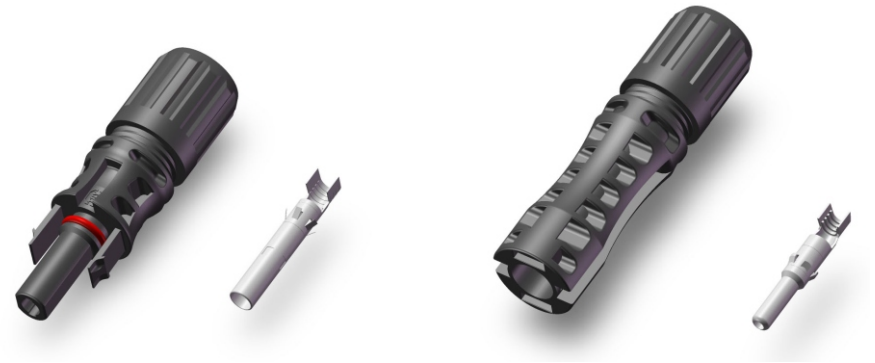

修改履历记录表 Revision History Record Form					
序号 No.	版本 Version	变更章节 Change Section	变更内容 Change Content	日期 Date	备注 Remark
1	A1	N/A	New version	2024-12-6	New Model

目录 CONTENTS

封面 Cover 1

目录 Contents 2

安全须知 Safety instructions 3-4

技术参数 Product Speciffcations 5

产品爆炸图 Exploded Views 6

零件尺寸 Parts Size 7-8

安装工具 Tools required 9

工具主要尺寸 Tools main size 10

快速安装 Quick installation 11-13

安全须知 Safety instructions

警告 WARNING

1. 安装前请先阅读使用说明书，并遵守安装说明和安全须知，否则可能会导致因电击、电弧、火灾或系统故障而危及人身安全。
2. 安装前请先检查产品是否完好，请勿使用损坏或者零件缺失的产品。
3. 安装人员须持电工证或受过电气培训合格的人员。
4. 禁止在带电的情况下安装或拆卸本产品，安装或拆卸前必须先切断电源。
5. 本品只能使用一次，安装后勿再调整使用。如有损坏，请更换。
6. 断开的连接器请使用防尘帽，以免异物进入污染。
7. 本品防水等级为IP68(1m1h),但是不能置于水中使用，不能将本品置于屋顶表面。
8. 产品禁止在含小分子油、烃、酚、酮、氨合物等与塑料有腐蚀的环境中使用。禁止在连接器里添加或涂抹任何油脂及润滑剂。
9. 产品安装使用符合光伏组件要求。
10. 连接器只有在按照这些组装说明规定的方式组装时才被认为符合IEC 62852。
11. 本连接器仅适用于B级和C级绞合铜导体（参见NFPA 70，国家电气规范）
12. 请妥善保管使用说明书，并将其移交给后续用户。

1. Please read the manual before installation and follow the installation instructions and safety notices, ohterwise would in life-threatening injuries due to electric shock, electric arcs, fire, or failure of the system.
2. Please check that the product is in good condition before installation. Do not use products that are damaged or have missing parts.
3. The installer must have an electrician's license or a qualified person with electrical training.
4. Do Not Disconnect Under Load: PV plug connections must not be disconnected while under load. They can be placed in a no load state by switching off the DC/AC converter or breaking the AC circuit.
5. This product can only be used once. Do not adjust its use after installation.
6. Broken connectors Please use a dust hat to prevent foreign objects from entering the pollution.
7. This product is IP68 (1M1H) classification of waterproof, but can not be used in water, can not be placed on the roof.
8. The product is prohibited from use in environments containing small molecules of oil, hydrocarbons, phenols, ketones, ammonia, etc. that are corrosive to plastics. It is prohibited to add or apply any grease or lubricant to the connector.
9.The product installation and use meet the requirements of PV modules.
10.The connector is considered to be in compliance with IEC62852, only when assembled in the manner specified by these assembly instructions.
11. This connector is suitable for use only with Class B and C stranded copper conductors (See NFPA 70, National Electrical Code).
12. Please safeguard the instruction manual and hand it over to a subsequent user.

安全须知 Safety instructions

应用范围 Intended use

本品用于光伏直流 (DC) 电路中的电气连接，亦可用作低压直流 (LVDC) 部件。如果需要作其他用途，则需要在符合本品技术参数的情况下使用。

This product is used for electrical connections in PV direct current (DC) circuits, and can also be used as low voltage direct current (LVDC) components. If additional use is required, it shall be used in compliance with the technical parameters of this product.

技术参数 Product Speciffcations

连接器系统 Connector system	Φ4mm
额定电压 Rated Voltage	1500V
额定电流	12AWG:30A dc/10AWG:50A dc
温度范围	-40℃~85℃
防水等级 Waterproof class	Insertion: IP68; Non-insertion: IP2X
接触电阻	≤0.5mΩ
安全等级 Safety class	DCⅡ
连接系统 Connected system	Multipoint connection
连接方式 Wiring	Crimping
导体 Conductor	Copper tin-plated
绝缘材质 Insulation material	PPO
自锁系统 Self-locking system	Embedded
防火等级 Flame class	UL94-V-0
测试线缆规格 Testing Cable Specification	UL: 90℃, 1500V or 2000V , Strands of Conductor 76/0.30, OD 6.8±0.1 mm, 10AWG PV wires. TUV: 2.5-10mm2 PV wires,

美桦
MAYLAR

产品爆炸图 Exploded Views

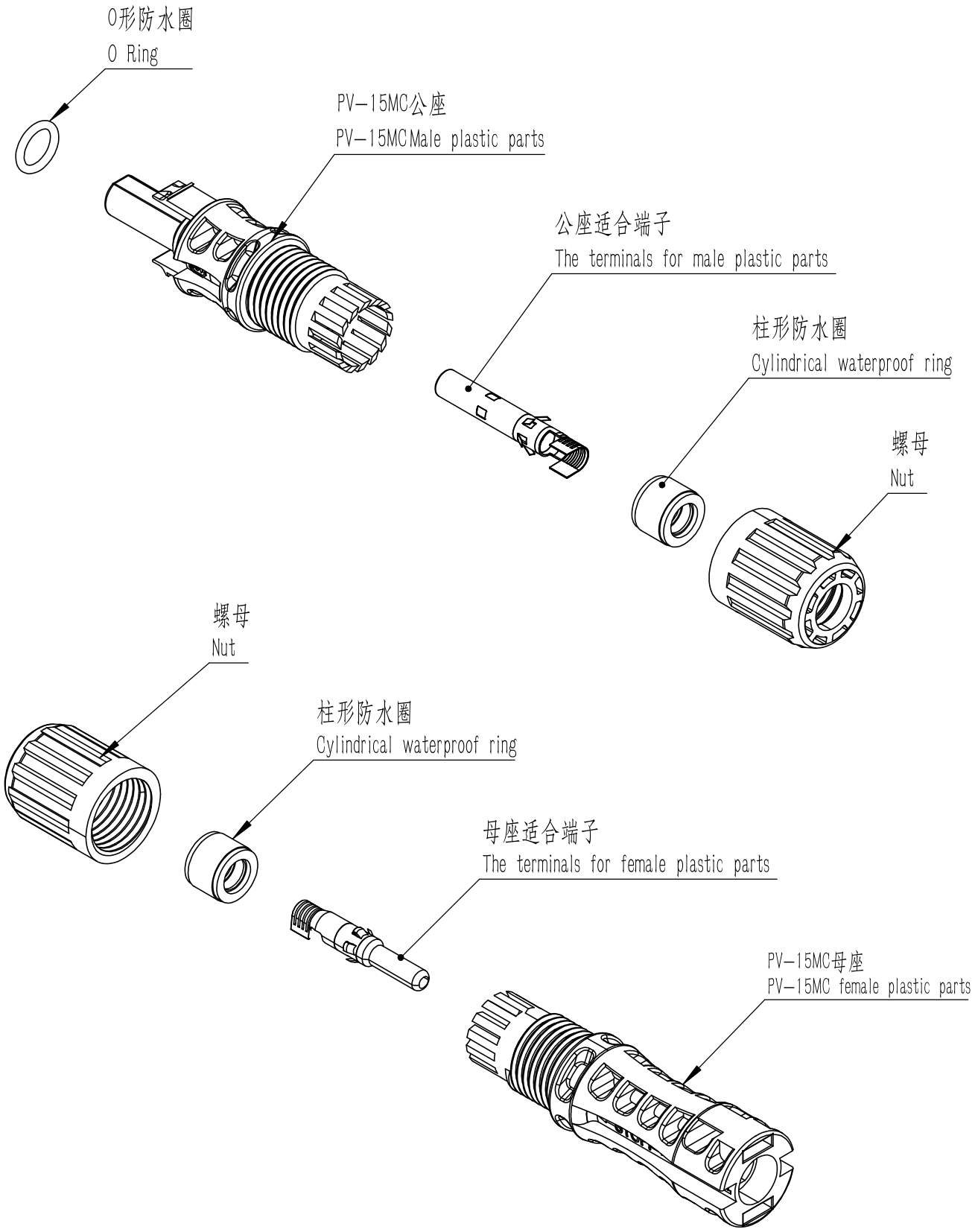

产品尺寸 Product Size(mm)

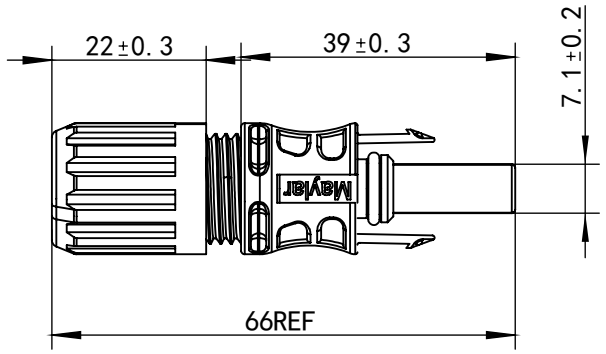

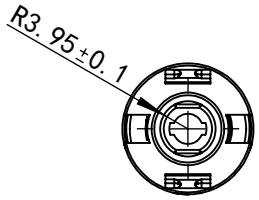

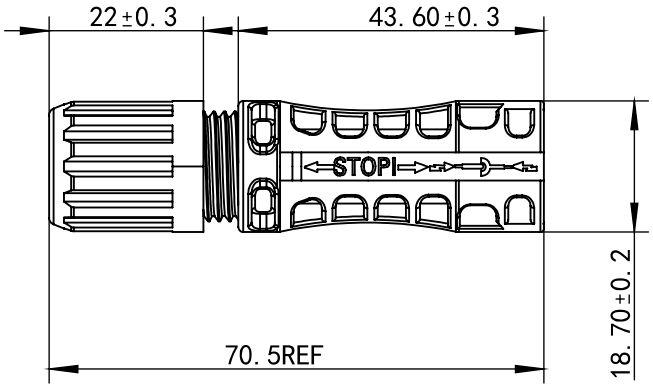

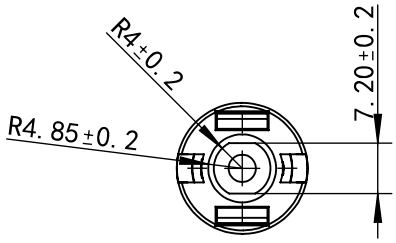

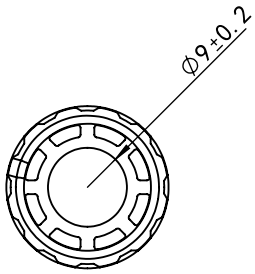

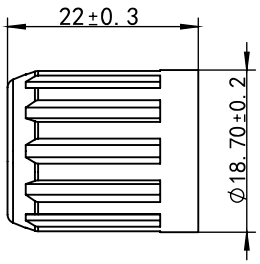

产品尺寸 Product Size(mm)

30A端子

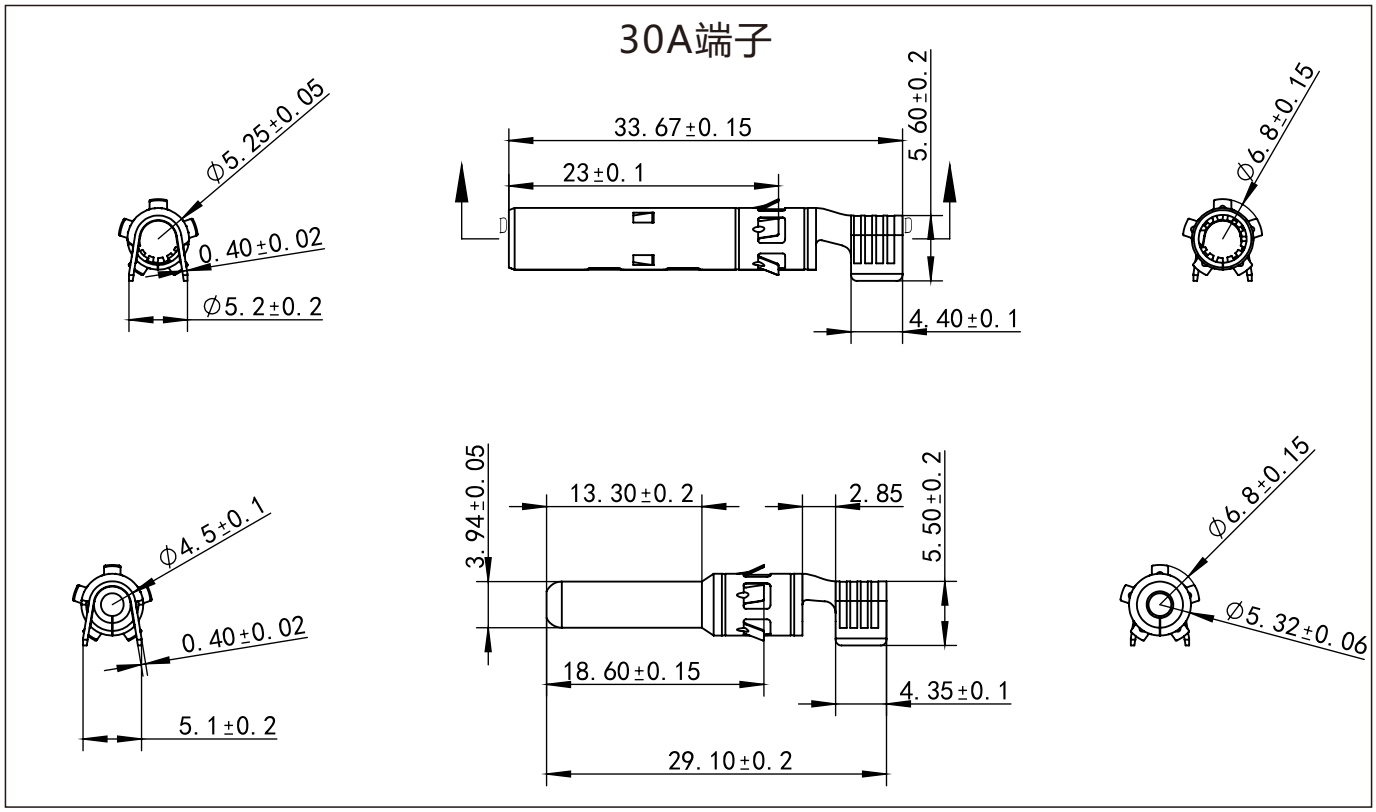

50A端子

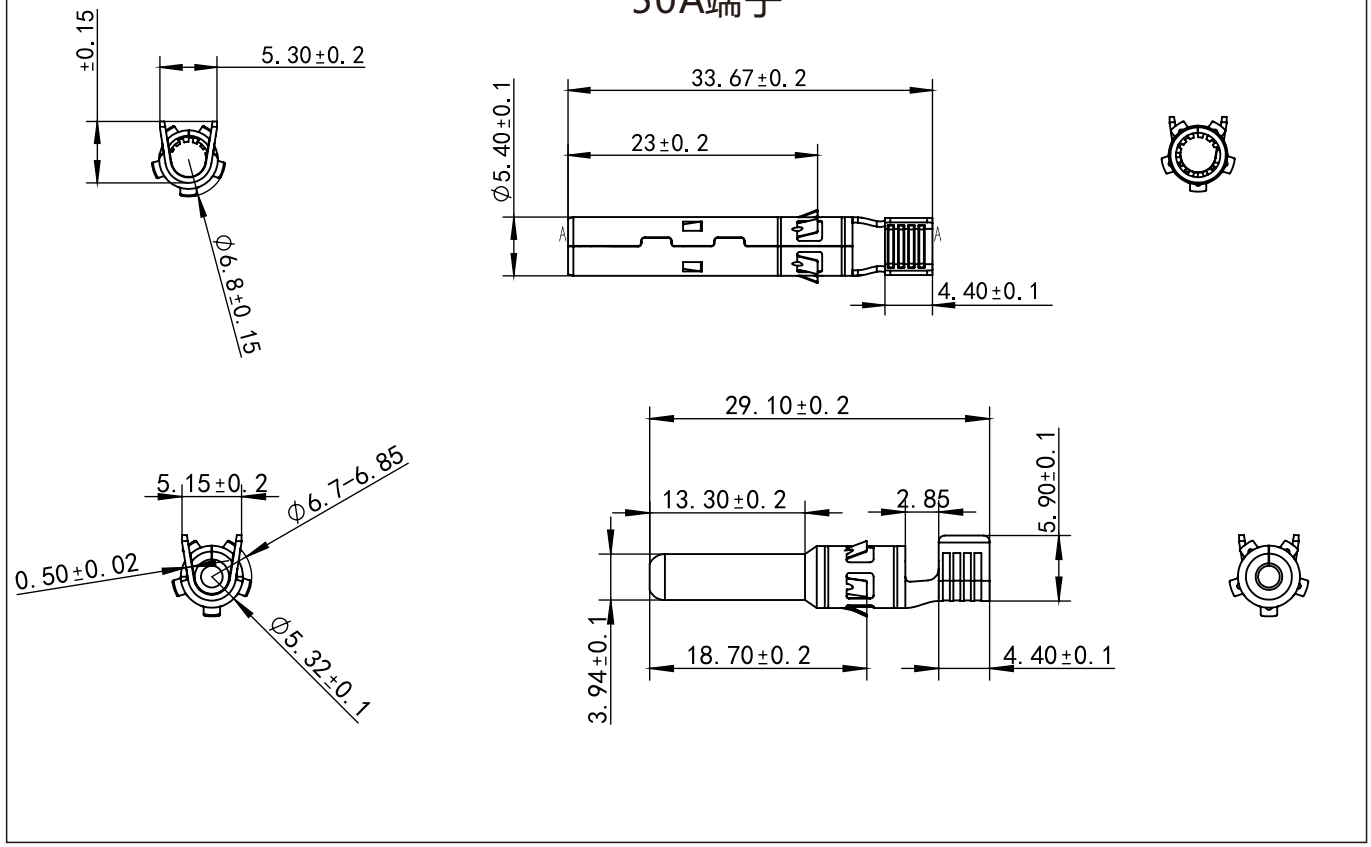

安装工具 Tools required

	名称：剪线钳 型号：MHT-WC8AWG 厂家：东莞市美桦电子有限公司 Name: PV cutting pliers Model: MHT-WC8AWG Manufacturer: Dongguan Maywah Electronics Co., Ltd.	剪线钳：剪线范围：8AWG(16mm2)以下 Wire cutting pliers: wire cutting range: 8 AWG (16mm2) below
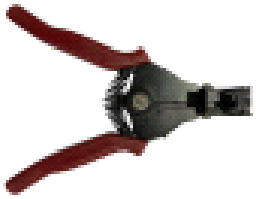	名称：剥线钳 型号：MHT-WS10-16AWG 厂家：东莞市美桦电子有限公司 Name: PV stripping pliers Model: MHT-WS10-16AWG Manufacturer: Dongguan Maywah Electronics Co., Ltd.	剥线长度：≤30mm, 剥线线径范围：10/12/14/16AWG/(0.9-6 mm2) Stripping length: ≤ 30mm, stripping wire diameter range: 10 / 12/ 14/ 16AWG/ (0.9-6 mm2)
	名称：压线钳 型号：LY2546B 厂家：东莞市美桦电子有限公司 Name: PV crimping pliers Model: LY2546B Manufacturer: Dongguan Maywah Electronics Co., Ltd.	压线范围：14AWG/12AWG/10AWG(2.5/ 4/6 mm2)，长度：270mm, 重量：0.74kg Crimping range: 14AWG/ 12AWG/ 10AWG (2.5/ 4/ 6mm2), Length: 270mm, Weight: 0.74 kg
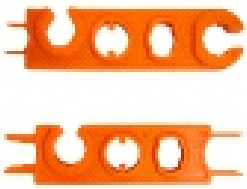	名称：多功能光伏扳手 型号：sunny twins 厂家：东莞市美桦电子有限公司 Name: multi-function PV wrench Model: sunny twins Manufacturer: Dongguan Meihua electronics Co., Ltd.	多功能光伏扳手-Sunny twins, 材质: PA Multifunctional PVwrench - Sunny twins, Material: PA

工具主要尺寸 Tools main size(mm)

•压接刀模尺寸 Tools size

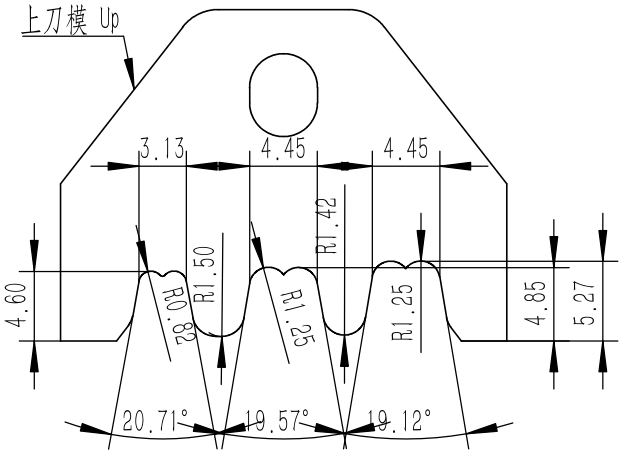

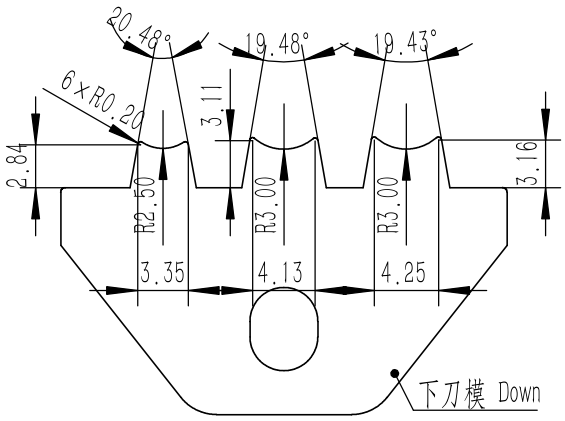

Model No.	Wire range (AWG)	Crimp tool identification				Crimp dimen-sions LxH (mm)	Number of crimps
		Manufacturer name	Crimp tool type	Upper die number	Lower die number		
Locking Type Cable Connectors, Models PV-MC (male and	10awg	Dongguan Maywah Electronics Co., Ltd.	LY-2546B	10 AWG	6 mm²	4.5×2.6	1

•光伏扳手(sunny twins)尺寸 PV Spaner(sunny twins) size

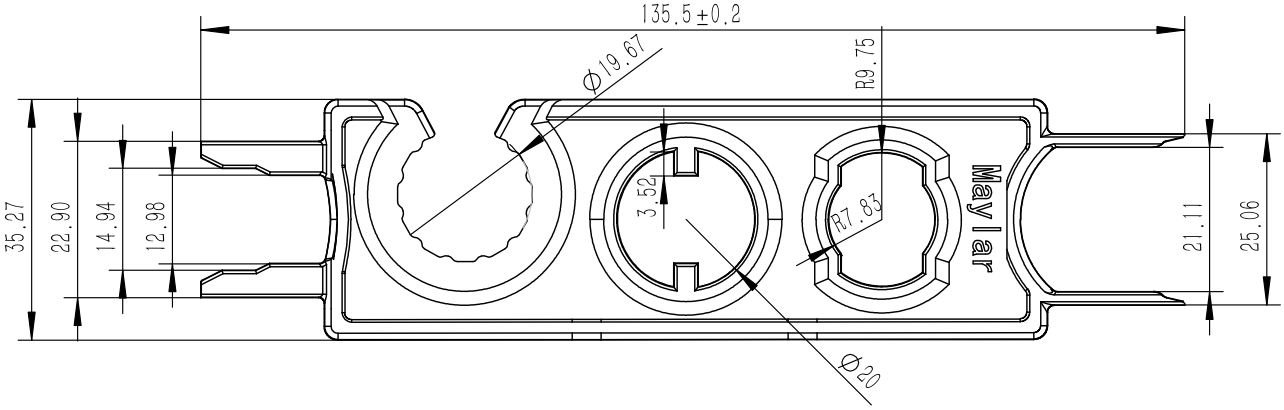

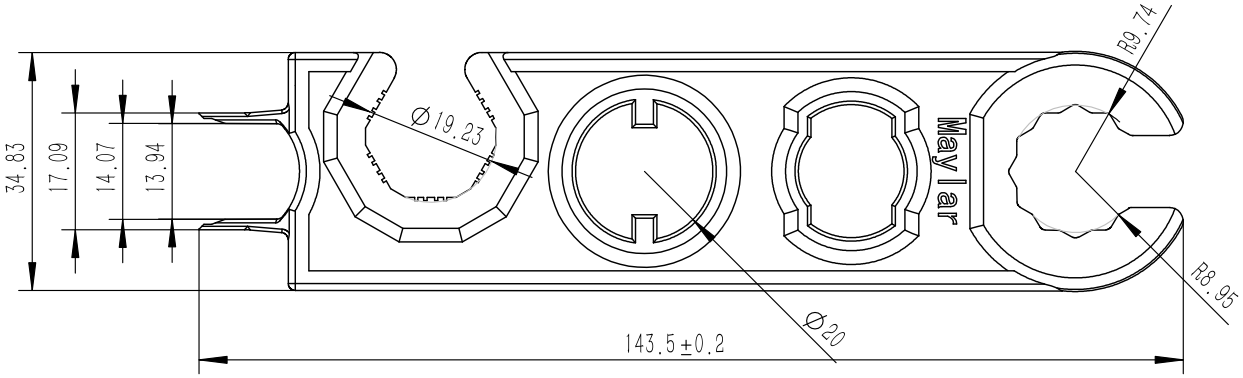

快速安装 Quick installation

安装前请检查产品是否完好，零件是否齐全，图1为产品预安装状态：

Please check that the product is in good condition and parts are complete before installation. Figure 1 shows the pre-installation status of the product:

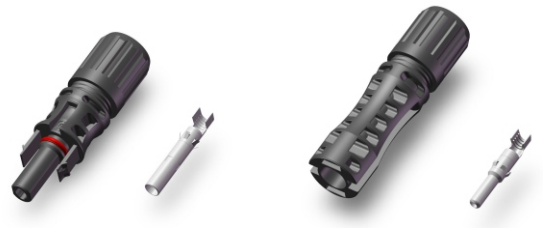

图1 Figure 1

步骤1：剥除电缆绝缘层，剥除的长度为6 至 7 mm。

Step1:Strip cable to dimension 6 to 7 mm.

剥线长度X：6≤X≥7mm

⚠ 注意不要切断铜丝。
Do not cut individual strands when stripping!

步骤2：压接。

Step2:Crimping.

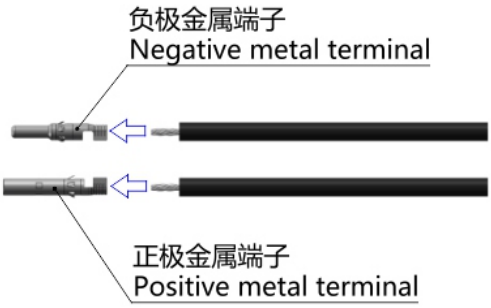

将插针置入适当截面范围的压线口，并确保插针完全端正地插入到压线口。

Insert the contact in the appropriate cross-section range, and make sure the contact is inserted fully correctly into the wire port.

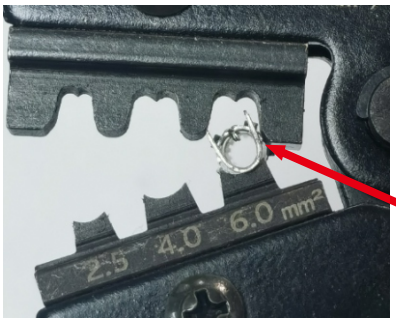

歪斜的
Askew

快速安装 Quick installation

插入剥皮后的电缆末端，使电缆导体与插针的压接套充分接触，压紧(参考拉拔力≥300N）后取出电缆。

Insert the stripped lead end until the lead strands come up against the locator, press tight (Reference pull tension≥300N) and remove the cable.

注意：* 所有铜丝都须被压接在压接套内
* 端子的压线套与电缆绝缘层的距离x;
端子压线套与电缆铜丝的距离y。
* 压接套没有破损或变形。
* 压接形状对称。

NOTE: * All of the strands must be captured in the crimp sleeve.
* The distance x between the crimped contact and the wire insulation must be maintained;
the distance y between the crimped contact and the copper wire must be maintained.
* the crimp sleeve is not deformed or missing any portion of the crimp faps.
* The crimp is symmetrical.

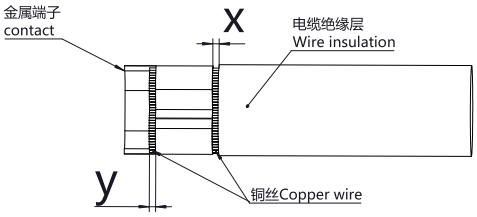

$0 \le x \le 1$ $0.5 \le y \le 2$

步骤3：线束组装

Step3: Cable assembly

注意区分正负极，将压接好端子的电缆插入到塑胶座内，直至金属件与塑胶座啮合。

Be careful to distinguish the positive and negative poles, and insert the cable with the soldered contact into the plastic case, until the contact is meshed with the plastic case.

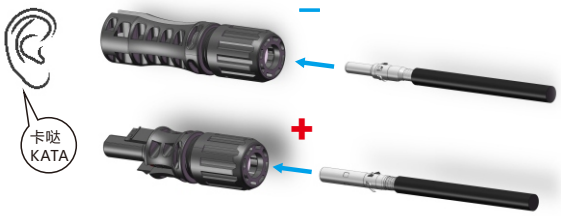

步骤4：螺母组装

Step4: Nut assembly

使用多功能光伏扳手 sunny twins拧紧螺母与塑胶主体,参考扭力为值1.8N m左右。工厂批量组装建议使用治具以提高效率。

Tighten the nuts and plastic body with the multi-functional solar wrench sunny twins ,Reference torque1.8N m. It is recommended to use fixtures for mass assembly in the factory to improve efficiency.

快速安装 Quick installation

步骤4：公母对插及解锁

Step4: The male and female inserts and unlocks

1. 将连接器正负极对插，直到啮合,轻拉连接器（Max≤20N)，确保连接器已经啮合。

   Plug the positive and negative of the connector together until they are roded.Check correct engagement by gently pulling the connector (maximum pulling force≤20 N).

2. 如需要解锁，请使用多功能光伏扳手sunny twins。

   If you need to unlock, please use the multi-function solar wrench sunnytwins.

   * 将解锁销推入插入插座锁扣中，并断开耦合，断开插头连接。

   *Push the unlocking bolt into the plug-in socket button and disconnect the coupling, disconnect the plug connection.

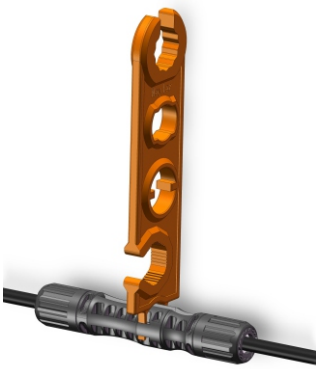

电缆布线和电线管理 Cable routing and wire management

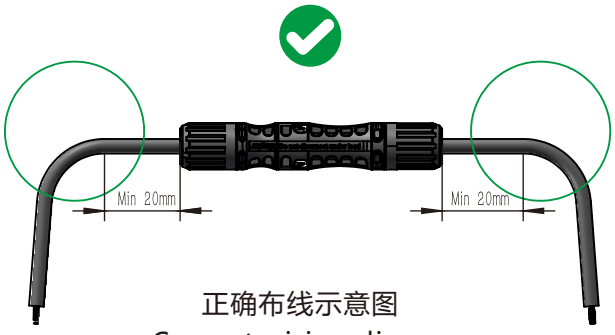

正确布线示意图
Correct wiring diagram

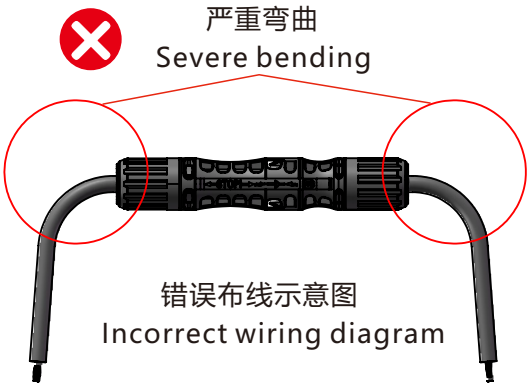

错误布线示意图
Incorrect wiring diagram

⚠ 注意：*不要让连接器受到污染；
*不要置于屋顶表面；
*不要置于水中；
*不要让连接器受到机械压力。

NOTE: *Do not allow connectors to be contaminated by the environment;
*Do not allow that the connector is directly on the rooffng surface;
*Do not allow that the connector is in standing water;
*Do not subject the connector to mechanical stress.

感谢阅读

Thanks for reading