美桦
MAYLAR

# 光伏二极管连接器使用说明书

# PV diode connector instruction manual

## MC-D

| 修改履历记录表 Revision History Record Form | | | | | |
|---|---|---|---|---|---|
| 序号<br>No. | 版本<br>Version | 变更章节<br>Change Section | 变更内容<br>Change Content | 日期<br>Date | 备注<br>Remark |
| 1 | A1 | N/A | New version | 2026-01-06 | New Model |

# 目录 CONTENTS

封面 Cover ..... 1

目录 Contents ..... 2

安全须知 Safety instructions ..... 3

技术参数 Product Speciffcations ..... 4

产品爆炸图 Exploded Views ..... 5

零件尺寸 Parts Size ..... 6

功能介绍 Function introduction ..... 7

环境对电流的影响及修正 ..... 7-8
The influence of the environment on current and itscorrection

物料情况及存储 Material conditions and storage ..... 8

快速安装 Quick installation ..... 9

电缆布线和电线管理Cable routing and wire management ..... 10

# 安全须知 Safety instructions

## 警告 WARNING

1. 安装前请先阅读使用说明书，并遵守安装说明和安全须知，否则可能会导致因电击、电弧、火灾或系统故障而危及人身安全。
2. 安装前请先检查产品是否完好，请勿使用损坏或者零件缺失的产品。
3. 安装人员须持电工证或受过电气培训合格的人员。
4. 禁止在带电的情况下安装或拆卸本产品，安装或拆卸前必须先切断电源。
5. 本品只能使用一次，安装后勿再调整使用。如有损坏，请更换。
6. 断开的连接器请使用防尘帽，以免异物进入污染。
7. 本品防水等级为IP68(1m1h),但是不能置于水中使用，不能将本品置于屋顶表面。
8. 产品禁止在含小分子油、烃、酚、酮、氨合物等与塑料有腐蚀的环境中使用。禁止在连接器里添加或涂抹任何油脂及润滑剂。
9. 产品安装使用符合光伏组件要求。
10. 本连接器与MC4系列产品连接使用。
11. 请妥善保管使用说明书，并将其移交给后续用户。

1. Please read the  manual before installation and follow the installation instructions and safety notices, ohterwise would in life-threatening injuries due to electric shock, electric arcs, fire,  or failure of the system.
2. Please check that the product is in good condition before installation. Do not use products that are damaged or have missing parts.
3. The installer must have an electrician's license or a qualified person with electrical training.
4. Do Not Disconnect Under Load: PV plug connections must not be disconnected while under load. They can be placed in a no load state by switching off the DC/AC converter or breaking the AC circuit.
5. This product can only be used once. Do not adjust its use after installation.
6. Broken connectors Please use a dust hat to prevent foreign objects from entering the pollution.
7. This product is IP68 (1M1H) classification of waterproof, but can not be used in water, can not be placed on the roof.
8. The product is prohibited from use in environments containing small molecules of oil, hydrocarbons, phenols, ketones, ammonia, etc. that are corrosive to plastics. It is prohibited to add or apply any grease or lubricant to the connector.
9.The product installation and use meet the requirements of PV modules.
10. This connector is compatible with MC4 series products..
11. Please safeguard the instruction manual and hand it over to a subsequent user.

## 应用范围 Intended use

本品用于光伏直流 (DC) 电路中的电气连接，亦可用作低压直流 (LVDC) 部件。如果需要作其他用途，则需要在符合本品技术参数的情况下使用。

This product is used for electrical connections in PV direct current (DC) circuits, and can also be used as low voltage direct current (LVDC) components. If additional use is required, it shall be used in compliance with the technical parameters of this product.

## 技术参数 Product Speciffcations

| | |
|---|---|
| 连接器系统<br>Connector system | Φ4mm |
| 额定电压<br>Rated Voltage | 1000V |
| 额定电流<br>Rated current | 5A/10A/15A/20A/25A/30A（Options） |
| 防火等级<br>Flame class | UL94-V-0 |
| 环境温度范围<br>Operating Temperature range | -40℃~70℃ |
| 自锁系统<br>Self-locking system | Embedded |
| 防水等级<br>Waterproof class | Insertion：IP68;<br>Non-insertion：IP2X |
| 接触电阻<br>Contact resistance | ≤1mΩ |
| 安全等级<br>Safety class | DcⅡ |
| 连接系统<br>Connected system | Multipoint connection |
| 连接方式<br>Wiring | Plug-and-play |
| 导体<br>Conductor | Copper tin-plated |
| 绝缘材质<br>Insulation material | PPO |

## 产品爆炸图 Exploded Views

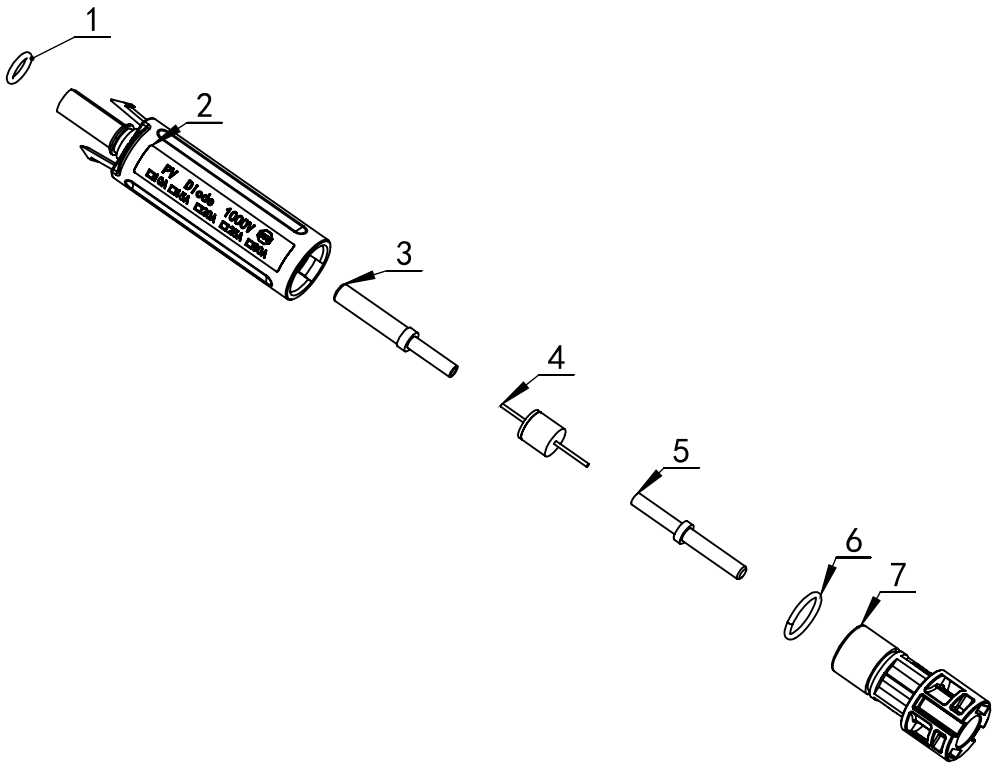


1. O形圈 /O-ring

2.公座面板座/Male panel receptacle

3.公座适配端子/Male terminal

4.光伏二极管PV Diode

5.母座适配端子/Female terminal

6. O形圈 /O-ring

7.母座面板座/Female panel receptacle

## 零件尺寸 Parts Size(mm)

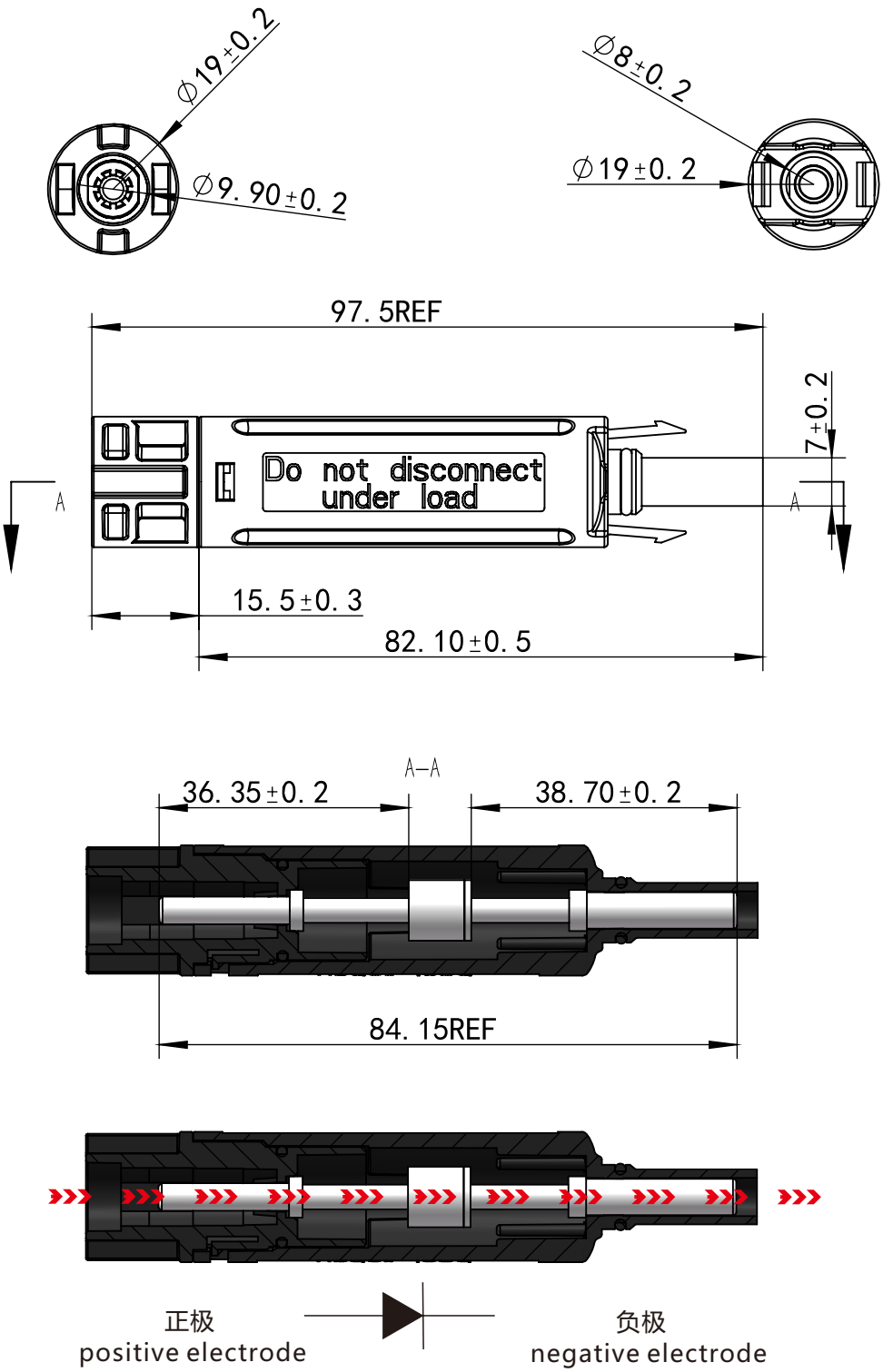


电流方向
Current direction

## 功能介绍 Function introduction

本光伏二极管连接器适用于额定电压为DC1000V、额定电流为5A至30A （可选），主要通过单向导电特性防逆流保护光伏设备。该连接器与MC4对接兼容。

This PV diode connector is suitable for a rated voltage of DC 1000V and a rated current ranging from 5A to 30A (selectable). It primarily utilizes its unidirectional conductivity to protect photovoltaic equipment. The connector is compatible with MC4 connectors

## 环境对电流的影响及修正
## The influence of the environment on current and itscorrection

1. 不同环境温度下使用电流修正值：
在 20℃环境温度下，我们推荐二极管的实际工作电流不应超过额定电流值。选用二极管时应考虑到环境及工作条件，如封闭程度、空气流动、连接电缆尺寸（长度、截面）、瞬时峰值等方面的变化；二极管的电流承载能力试验是在 20℃环境温度下进行的，实际使用时受环境温度变化的影响。环境温度越高，二极管的工作温度就越高，其寿命也就越短。相反，较低的温度下运行将延长二极管的寿命。

Current correction values for use at different ambient temperatures:
At an ambient temperature of 20°C, we recommend that the actual operating current of the diode should not exceed its rated current value. When selecting a diode, environmental and operating conditions should be considered, such as the degree of enclosure, air flow, connecting cable dimensions (length, cross-section), and transient peaks. The current-carrying capacity test of the diode Is conducted at an ambient temperature of 20°C, and its actual use is affected by changes in ambient temperature. The higher the ambient temperature, the higher the operating temperature of the diode, and the shorter its lifespan. Conversely, operating at lower temperatures will extend the lifespan of the diode.

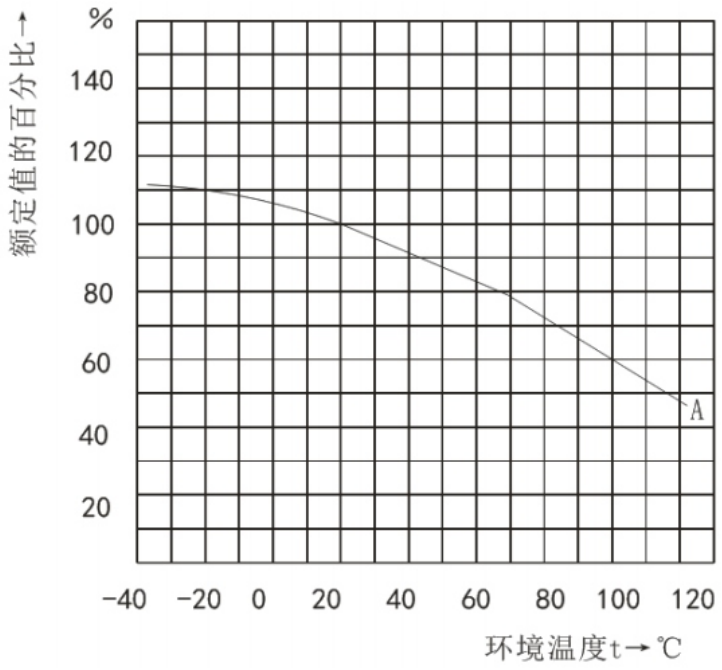


环境温度对电流承载能力影响的典型曲线

## 环境对电流的影响及修正
## The influence of the environment on current and itscorrection

2. 不同海拔下使用的电流修正系数:
Current correction coefficients used at differentaltitudes:

| 海拔高度 altitude | ≤2000m | 2000m~3000m | ≥3000m | 举列 List |
|---|---|---|---|---|
| 电流修正系数 Current correction factor | 1 | 0.9 | 0.8 | 额定电流 10A 的产品海拔2500m 降容使用后额定电流为 0.9×10=9A For a product with a rated current of 10A, when used at an altitude of 2500m, the derated current is 0.9 × 10 = 9A |

## 物料情况及存储 Material conditions and storage

1. 绝缘壳体: PPO;
2. 端子: 铜导镍;
3. 防水圈: 硅胶;
4. 产品储存环境:
   ①. 无雨雪侵入;
   ②. 空气流通;
   ③. 湿度小于70%;
   ④. 环境温度小于40C,24h平均温度小于35c,低温高于-5c;
   ⑤. 周围空气无酸性、碱性或者其他腐蚀气体。

1.Insulating housing: PPO;
2. Terminal: copper tin nickel;
3.Waterproof ring: Silicone;
4.Product storage environment.
   ①.No entry of snow or rain ;
   ②.With air circulation/ventilation ;
   ③.Relative humidity (RH) less than 70%;
   ④.Ambient temperature not exceeding +40°C, with a 24-hour average temperature below +35°C and a low temperature above -5°C;
   ⑤.The surrounding atmosphere shall be free of acidic, alkaline, or other corrosive gases。

## 快速安装 Quick installation

安装前请检查产品是否完好，电流安培量是否匹配需求。

Before installation, make sure the product is undamaged and the current amperage matches your requirements.

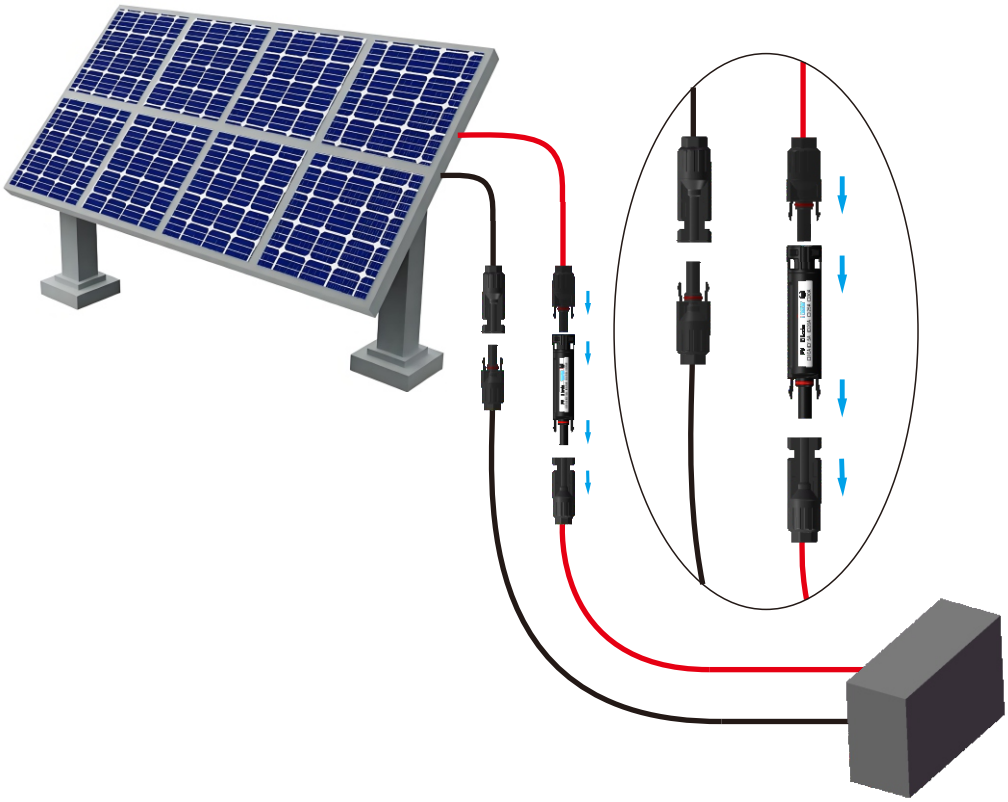

将二极管连接器安装在光伏系统的正极电路中，使用光伏连接器连接。
将连接器公母座对插，直到啮合, 轻拉连接器（Max≤20N)，确保连接器已经啮合。

Install the diode connector in the positive circuit ofthe photovoltaic system and connect it using a PV connector.
Plug the male and female of the connector together until they are roded.Check correct engagement by gently pulling the connector (maximum pulling force≤20 N).

## 电缆布线和电线管理 Cable routing and wire management

使用连接器时请使用扎带或线码来固定
When using connectors, employ cable ties or wire clamps for fixation.

正确布线示意图
Correct wiring diagram

禁止连接器悬空吊着使用
Prohibit the use of connectors with dangling (unterminated) ends

错误布线示意图
Incorrect wiring diagram

注意：*不要让连接器受到污染；
*不要置于屋顶表面；
*不要置于水中；
*不要让连接器受到机械压力。

NOTE：*Do not allow connectors to be contaminated by the environment;
*Do not allow that the connector is directly on the rooffng surface;
*Do not allow that the connector is in standing water;
*Do not subject the connector to mechanical stress.

感谢阅读
Thanks for reading